CAE

CIVIL AVIATION

Gulfstream GIV

Business Aircraft Maintenance Training

Confidence through
smarter training

Delivering the very BEST AVIATION MAINTENANCE TRAINING while RAISING INDUSTRY STANDARDS

Why you should choose CAE as your maintenance training provider

Proper aircraft and helicopter maintenance is vital to ensure the safety of business air travel. The daily challenges of operating a successful operation in aviation can only be met with adequate preparation and training to keep pace with the continual advancements of the complex technologies found in this constantly changing field.

Let us deliver on the investment of your most valued, strategic asset: your team. CAE can elevate the skillsets of your entire staff, regardless of experience level. We will help attract and prepare new talent with our accelerated learning systems.

With CAE's approach to complete flexibility on multiple fronts: course type, training site, and targeted solutions -we lower downtime, while increasing productivity.

- Realize increased technician potential with our precise and proven course materials and training methods
- Improve your aircraft dispatch rates by building technician confidence with CAE's highly effective, application-oriented, interactive instruction techniques
- Experience higher savings by targeting your training budget at programs which deliver unmatched quality, safety, and results

As a long-standing leader in the field of simulation and other advanced, digital training solutions, CAE is your best choice for improving safety and removing the obstacles which impede your progress. Offering superior maintenance training for over 20 years, we invite you to keep your technicians' skillsets current across a full suite of learning programs for most major OEMs, including Bombardier, Dassault, Embraer, Gulfstream.

With a global network of training centers, highly skilled instructors, and advanced training tools, look to CAE for flexible, relevant, and leading-edge business aircraft maintenance training solutions to enhance safety, efficiency, and readiness for your staff and fleet.

We are here to ensure your success.

All rights reserved. © July 2022 CAE.COM

TABLE OF CONTENTS Page

CAE Teaching Objectives 2
Student Training Expectations 2
Classroom Discussion 3
Applied Training Techniques 3
Total Training Environment Flexibility 3
Airframe Systems Maintenance Training Summary 4
Maintenance Systems Maintenance Training Summary 5
Familiarization Maintenance Training Summary 6
Line Maintenance Training Summary 7
Electrical Interface Maintenance Training Summary 8
Avionics Maintenance Training Summary 9
REALcase Update Maintenance Training Summary 10
REALcase Troubleshooting Maintenance Training Summary. 11
Engine Run & Taxi (Initial) Maintenance Training Summary ... 12
Engine Run (Initial) Maintenance Training Summary 13

CAE Teaching Objectives

To provide the experienced aircraft technician with knowledge of major systems and major component description, location, and operation; servicing; safety precautions; and troubleshooting to support a typical through-flight maintenance and inspection schedule in accordance with the manufacturer's Aircraft Maintenance Manual.

Student Training Expectations

Each student should be a Part 66/Part 65 certified Airframe and Powerplant Mechanic or have equivalent experience on similar type aircraft.

Courses are conducted in English and attendees must have a good working knowledge of the language enabling them to speak, read, and write in this language.

The candidate is required to attend at least 95% of all course content in order to successfully complete the training. A mark of 75% or above is needed for any written exams.

Click on CAE logo to return to this page

All rights reserved. © July 2022 CAE.COM

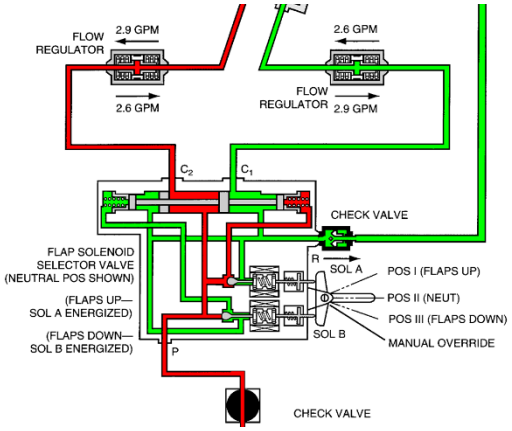

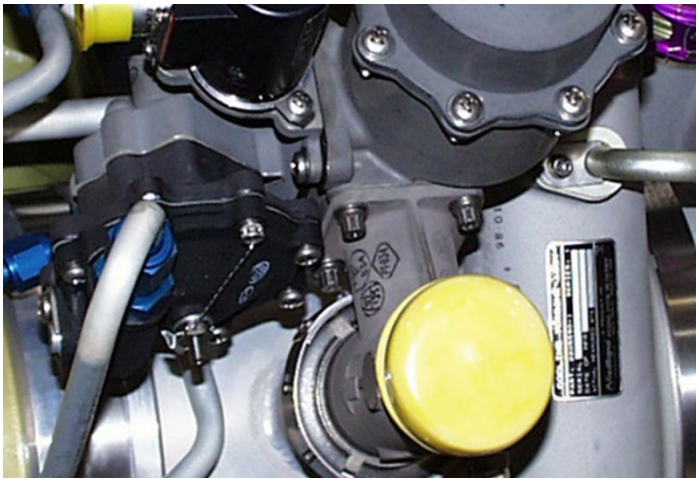

Classroom Discussion

This phase covers classroom lectures comprising:

- in-depth description of systems
- operation, identification, and location of principle components
- maintenance, inspection, and ground run procedures
- routing and theoretical troubleshooting
- preventive maintenance
- safety precautions

The students are encouraged to participate throughout these sessions, which are often interspersed with review questions. This phase may also include visits to the flight line facilities where students are exposed to the real aircraft, system components.

Applied Training Techniques

The practical phase is conducted by an experienced instructor using "hands on" training modules, Fixed Training Device (FTD) or Full Flight Simulator (FFS) and where applicable: real aircraft components. The students are involved in practical tasks associated with maintenance of the aircraft such as:

- Practical troubleshooting
- Servicing Procedures
- System start-up and shut-down procedures
- Normal, Abnormal and Emergency Procedures

This enables the students to apply knowledge gained during other learning phases of this course. A minimum of 5% of the course shall be conducted using possible combinations of a FTD, FFS, the aircraft, mock-ups, or actual aircraft components.

Total Training Environment Flexibility

Courses may be conducted at most of our global network of training centers (including CAE's hybrid classrooms) , at a customer's facility (off-site), or via distance learning / Live Remote Training (LRT).

All rights reserved. © July 2022 CAE.COM

Airframe Systems Maintenance Training Summary

Course Description

The main focus of this course is on Airframe Systems. In addition to training on system operation, emphasis is placed on maintenance procedure sand servicing tasks, functional and operational tests (as applicable), and troubleshooting/fault isolation procedures and best practices.

Note: Airframe Systems training differs from the traditional Maintenance Initial in that it is designed to be a more focused curriculum for technicians that may already have initial exposure and/or experience on the particular aircraft. Technicians with no prior exposure and/or experience are encouraged to attend the Maintenance Initial course.

Course Objectives

After completion of this Airframe Systems Type Course, the student should be able to:

- Use and interpret the appropriate technical publications
- Describe the purpose and interfaces of each system and associated components
- Explain the operation of each main system and associated components
- Identify and locate the major components associated with each system
- Identify, locate and describe the system controls and indications
- Troubleshoot and isolate failures of specific systems or components

Course Total Time ..... 72 Hrs / 12 Days

SUBJECT	ATA
Electrical	24
APU	49
Fire Protection	26
Indicating & Recording	31
Hydraulic Power	29
Flight Controls	27
Lights	33
Water /Waste	38
Doors	52
Landing Gear	32
Pneumatics	36
Air Conditioning	21
Ice & Rain Protection	30
Fuel Systems	28
Equipment/Furnishings	25
Oxygen	35
Servicing	12

Regulatory Compliance

CAE is authorized to conduct this course under the following Regulatory Authority approvals:

- (Unregulated)

All rights reserved. © July 2022 CAE.COM

Maintenance Systems Maintenance Training Summary

Course Description

Our Initial-level maintenance training course covers all applicable ATA chapters, addressing aircraft systems' theory, operation, inspection, and servicing. The course examines LRU troubleshooting from a theoretical and practical perspective.

Hands-on sessions will be conducted on available aircraft to acquire an applied understanding of aircraft systems, and to participate in effective maintenance practices.

This comprehensive class is the ideal way to introduce technicians to transitions within the fleet.

Course Objectives

The Initial course furnishes the experienced technician with sufficient information to carry out the required maintenance, repair, and troubleshooting necessary to certify the continued airworthiness of the aircraft's mechanical and avionics systems.

Course Total Time .....60 Hrs / 10 Days

SUBJECT	ATA
Introduction	1
Flight Deck	2
Times and Limitations	5
Aircraft General	6-12
Air Conditioning	21
Auto Flight	22
Communication	23
Electrical Power	24
Equipment Furnishings	25
Fire Protection	26
Flight Controls	27
Fuel	28
Hydraulic Power	29
Ice & Rain System	30
Indicating & Recording	31
Landing Gear	32
Lighting	33
Navigation / RVSM	34
Oxygen	35
Pneumatic	36
Airborne Auxiliary Power	49
Structures	51-57
Power Plant	71-80

Regulatory Compliance

CAE is authorized to conduct this course under the following Regulatory Authority approvals:

- (Unregulated)

All rights reserved. © July 2022 CAE.COM

Familiarization Maintenance Training Summary

Course Description

This maintenance course will help technicians understand the aircraft systems, servicing, and practical know-how to maintain the aircraft properly. The course is for the technician who has similar aircraft experience, yet also for the manager or scheduler who wants a better understanding of the aircraft.

If the aircraft is available, actual hands-on practices will be conducted to ensure a complete understanding of aircraft systems and "real-world" maintenance practices.

The Familiarization class offers an excellent way to extend technician productivity.

Course Objectives

The General Familiarization course provides the applicant with a general description of the aircraft capabilities, systems, avionics, power plant, maintenance, and support requirements.

Course Total Time ..... 30 Hrs / 5 Days

SUBJECT	ATA
Flight Deck	2
Times and Limitations	5
Aircraft General	6-12
Air Conditioning	21
Auto Flight	22
Communication	23
Electrical Power	24
Fire Protection	26
Flight Controls	27
Fuel	28
Hydraulic Power	29
Ice & Rain System	30
Indicating & Recording	31
Landing Gear	32
Lighting	33
Navigation / RVSM	34
Oxygen	35
Pneumatic	36
Airborne Auxiliary Power	49
Power Plant	71-80

Regulatory Compliance

CAE is authorized to conduct this course under the following Regulatory Authority approvals:

- (Unregulated)

All rights reserved. © July 2022 CAE.COM

Line Maintenance Training Summary

Course Description

The line maintenance course is a condensed session enabling technicians to understand aircraft systems and servicing with an emphasis on practical experience to build aircraft maintenance skills. This training differs from the traditional Maintenance Initial in that it is designed to be a more focused curriculum for technicians that may already have initial exposure and/or experience on the particular aircraft.

Moderate troubleshooting is stressed and reinforced with actual hands-on sessions on available aircraft. Active student participation provides a better understanding of aircraft systems and effective maintenance practices. For operations with technician scheduling and cost limitations, this option creates a highly productive solution.

Course Objectives

After completion of this Line Maintenance course, the student should be able to:

- Use and interpret the appropriate technical publications
- Describe the purpose and interfaces of each system and associated components
- Explain the operation of each main system and associated components
- Identify and locate the major components associated with each system
- Identify, locate, and describe the system controls and indications
- Troubleshoot and isolate failures of specific systems or components

Course Total Time ..... 30 Hrs / 5 Days

SUBJECT	ATA
Times and Limitations	5
Aircraft General	6-12
Air Conditioning	21
Auto Flight	22
Communication	23
Electrical Power	24
Fire Protection	26
Flight Controls	27
Fuel	28
Hydraulic Power	29
Ice & Rain System	30
Indicating & Recording	31
Landing Gear	32
Lighting	33
Navigation / RVSM	34
Oxygen	35
Pneumatic	36
Airborne Auxiliary Power	49
Power Plant	71-80

Regulatory Compliance

CAE is authorized to conduct this course under the following Regulatory Authority approvals:

- (Unregulated)

All rights reserved. © July 2022 CAE.COM

Electrical Interface Maintenance Training Summary

Course Description

This course is a combination of recurrent, in-depth troubleshooting practices, and tracing wiring diagrams. We employ a "white glove" approach where the majority of investigative work can be performed without using tools. Troubleshooting is performed from the cockpit level, using indication messages, support documentation, and wiring diagrams.

This is an intensive session with active classroom participation and considered an essential course for all proactive technicians familiar with the aircraft.

Course Objectives

This course provides the student with in-depth instruction on aircraft's electrical system and its interface with other aircraft systems. CAE furnishes the experienced technician with information to carry out troubleshooting and test procedures necessary to maintain the aircraft electrical systems. The course is based on the use of the manufacturers maintenance manuals and wiring diagrams, SmartFix Plus (SFP), synoptic pages, and the Maintenance Diagnostic Computer (MDC) to verify system status and isolate faults.

Course Total Time ..... 30 Hrs / 5 Days

SUBJECT	ATA
Times and Limitations	5
Aircraft General	6-12
Air Conditioning	21
Auto Flight	22
Communication	23
Electrical Power	24
Fire Protection	26
Flight Controls	27
Fuel	28
Hydraulic Power	29
Ice & Rain System	30
Indicating & Recording	31
Landing Gear	32
Lighting	33
Navigation / RVSM	34
Oxygen	35
Pneumatic	36
Airborne Auxiliary Power	49
Power Plant	71-80

Regulatory Compliance

CAE is authorized to conduct this course under the following Regulatory Authority approvals:

- (Unregulated)

All rights reserved. © July 2022 CAE.COM

Avionics Maintenance Training Summary

Course Description

The Avionics course furnishes the experienced aircraft technician with information pertaining to operation of the display, communication, navigation (short-range and long-range), and the automatic flight control (flight guidance) systems. It provides sufficient working knowledge of these systems to allow the technician to participate in troubleshooting at the line maintenance level.

All training is conducted to Level 3, according to ATA specification 104. A good understanding of basic avionics is suggested. (CAE also offers 40-hour classes in each of the following: Avionics Essentials Part I and Part II.)

Course Total Time ..... 30 Hrs / 5 Days

SUBJECT	ATA
Times and Limitations	5
Aircraft General	6-12
Auto Flight	22
Communication	23
Equipment Furnishings	25
Indicating & Recording	31
Navigation / RVSM	34
Central Maintenance System	45

Course Objectives

After completion of this Avionics course, the student should be able to:

- Use and interpret the appropriate technical publications.
- Describe the purpose and interfaces of each system and associated components
- Explain the operation of each main system and associated components
- Identify and locate the major components associated with each system
- Identify, locate and describe the system controls and indications
- Troubleshoot and isolate failures of specific systems or components

Regulatory Compliance

CAE is authorized to conduct this course under the following Regulatory Authority approvals:

- FAA [USA]

All rights reserved. © July 2022 CAE.COM

REALcase Update Maintenance Training Summary

Course Description

The REALcase concept utilizes fleet operational data/information that is acquired from the manufacturer and/or operators, spanning the 12 to 18-month period preceding the course. Information relevant to the operation, maintenance and troubleshooting of the aircraft, is presented during the course for review, analysis, and discussion. Emphasis is placed on applicable maintenance considerations, manufacturer recommendations, troubleshooting and dispatch decisions.

Course Objectives

- Better understand the latest in-service difficulties and/or operational issues experienced by fleet operators and reported to the OEM
- Understand and apply the latest manufacturer's documentation, recommendations, and operational maintenance procedures
- (When applicable) be acquainted with recent engine Service Bulletins, Service Information Letters, Enhancements / Options, Services Advisories, etc. pertaining to this engine
- Have increased technical understanding of the aircraft's core systems (with additional emphasis on particular systems the student may wish to focus on)
- Better understand and troubleshoot and/or isolate failures of specific systems or components in accordance with maintenance procedures and applicable documentation

Course Total Time ..... 30 Hrs / 5 Days

SUBJECT	ATA
Electrical Power	24
Pneumatics	36
Air Conditioning	21
Ice and Rain	30
Hydraulic Power	29
Landing Gear	32
Flight Controls	27
Fuel Systems	28
Engines/APU	71-80/49
Fire Protection	26
Indicating and Recording	31
On Board Maintenance	31

Regulatory Compliance

CAE is authorized to conduct this course under the following Regulatory Authority approvals:

- FAA [USA]

All rights reserved. © July 2022 CAE.COM

REALcase Troubleshooting Maintenance Training Summary

Course Description

The REALcase concept utilizes fleet operational data/information that is acquired from the manufacturer and/or operators, spanning the 12 to 18-month period preceding the course. Information relevant to the operation, maintenance and troubleshooting of the aircraft, is presented during the course for review, analysis, and discussion. Emphasis is placed on applicable maintenance considerations, manufacturer recommendations, troubleshooting and dispatch decisions.

Course Total Time ..... 30 Hrs / 5 Days

SUBJECT	ATA
Dispatch Decision Making Process	N/A
Electrical Circuits Review	(as applicable)
Fault Analysis Tools and Techniques	N/A
Fault Analysis Analytical App	N/A
Troubleshooting Plan of Action	N/A
Aircraft Schematic Description and Operation	N/A
Maintenance Systems and Diagnostics	31/45
Practical Troubleshooting Scenarios	(as applicable)

Course Objectives

After completion of this REALcase Troubleshooting Type Course, the student should be able to:

- Understand and apply the OEM's recommended approach as it pertains to operational maintenance procedures and best practices pertaining to aircraft system troubleshooting
- Identify and describe the maintenance fault isolation procedures and techniques utilized during aircraft troubleshooting activities and/or dispatch decision making
- Describe various aircraft troubleshooting analytical approaches
- Perform in depth circuit analysis and utilize OEM data relevant to aircraft troubleshooting
- Describe the operation of aircraft onboard maintenance diagnostic system as applicable to the troubleshooting scenarios presented during the course
- Enact a plan of action during troubleshooting activities

Regulatory Compliance

CAE is authorized to conduct this course under the following Regulatory Authority approvals:

- FAA [USA]

All rights reserved. © July 2022 CAE.COM

Engine Run & Taxi (Initial) Maintenance Training Summary

Course Description

This course provides designated technicians with the necessary procedures and practices to perform a successful engine run session. Our course combines both classroom theoretical instruction with practical, applied interaction with a Full Flight Simulator or similar advanced training aids.

This engaging and thorough course is ideal for any technician who has the added responsibility for taxiing aircraft to designated run-up areas, away from the maintenance hangar and parking ramp.

Course Objectives

After completion of this Engine Run and Taxi Initial Course, the student should be able to:

- Identify and use appropriate aircraft documentation
- Safely operate the aircraft as pertaining to engine starting and shutdown, including relevant pre-engine run safety precautions
- Safely perform any aircraft system emergency procedures as pertaining to engine and/or APU operation
- Perform aircraft ground handling and aircraft operations related to taxiing the aircraft in an active airport environment
- Address and contain aircraft malfunctions as pertaining to systems associated with either aircraft taxing and/or engine and/or APU operations, while maintaining situational awareness concerning the active airport environment in which these operations may be performed

Course Total Time ..... 12 Hrs / 2 Days

SUBJECT	ATA
Safety Prep / Planning	N/A
MRM (Maintenance Resource Management)	N/A
Mfr's Aircraft Operation Publications	N/A
Engine / APU Systems Review	49, 73-80
Engine / APU Normal Procedures	49, 73-80
Engine / APU Emergency Procedures	49, 73-80
Fire Protection System Review	26
NWS / Braking System Review	32
Communication System Review	23
Airport Signs, Markings and Lights	N/A
Airport Radio Comms & Protocols	N/A
Airport Operations and Taxi Procedures	N/A
Engine / APU Normal Op. Procedures	49, 73-80
Engines / APU Emergency Procedures	49, 73-80
Aircraft Ops (taxiing) & Ground-handling	N/A
Post Engine Run Checks	N/A

Training Location Requirements

Training will be conducted at an approved CAE Training Center where the required training aids and a Full Flight Simulator is available.

Regulatory Compliance

CAE is authorized to conduct this course under the following Regulatory Authority approvals:

- FAA [USA]

All rights reserved. © July 2022 CAE.COM

Engine Run (Initial) Maintenance Training Summary

Course Description

This course provides technicians with the necessary procedures, taught using a hands-on approach, to understand the requirements of performing a safe and successful engine run. Practical instruction, conducted with a Full Flight Simulator, will ensure safety is at the forefront of the experience by using this technology along with applicable checklists.

This comprehensive training course will enable the technicians to quickly become confident with valuable knowledge in this critical area of operational achievement.

Course Objectives

After completion of this Engine Run Course, the student should be able to:

- Describe the relevant safety precautions:
  - Engine intakes and exhaust
  - Engine operating limitations
  - Fire protection; Fuel; Hydraulics
- Identify and use appropriate aircraft documentation.
- Perform pre-start briefing on the aircraft, including operating crew in relation to normal operations and emergencies.
- Perform the normal and abnormal engine start procedures:
  - APU operation | Manual start | Normal shutdown procedures | Emergency shutdown procedures (Engine fire; APU fire)
  - Post engine run checks

Course Total Time ..... 6 Hrs / 1 Days

SUBJECT	ATA
Safety Prep/Planning	N/A
Engine Systems Review (Fuel, Fire Protection, Engine Oil system, Ignition & Starting)	70-80
Airframe Systems Review (Fire Protection, Fuel, Hydraulics, Brakes, NWS, APU).	26, 28, 29, 32, 49
Airport Radio Comms & Protocols	N/A
Engines / APU normal Op. procedures	49, 70-80
Engines / APU emergency procedures	49, 70-80
Post engine run checks	N/A

Training Location Requirements

Training will be conducted at an approved CAE Training Center where the required training aids and a Full Flight Simulator is available.

Regulatory Compliance

CAE is authorized to conduct this course under the following Regulatory Authority approvals:

- FAA [USA]

All rights reserved. © July 2022 CAE.COM

2929 W. Airfield Dr.
Dallas, Texas 75261

+1 (800) 527-2463 +1 (972) 456-8000 +44 1444-247535

https://www.cae.com/contact-us/civil-aviation/aircraft-maintenance-training-contacts